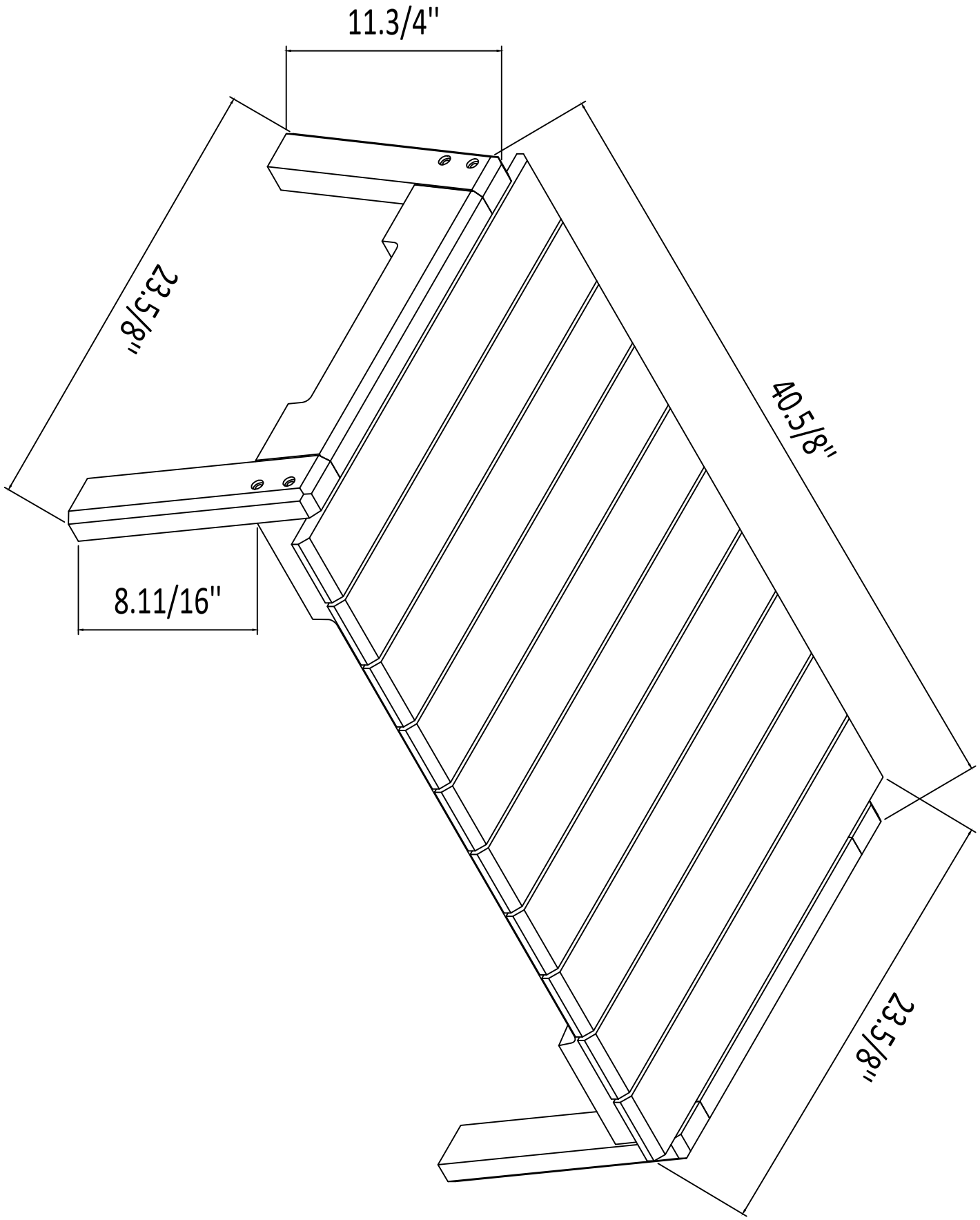
11.3/4"
23.5/8"
40.5/8"
8.11/16"
23.5/8"